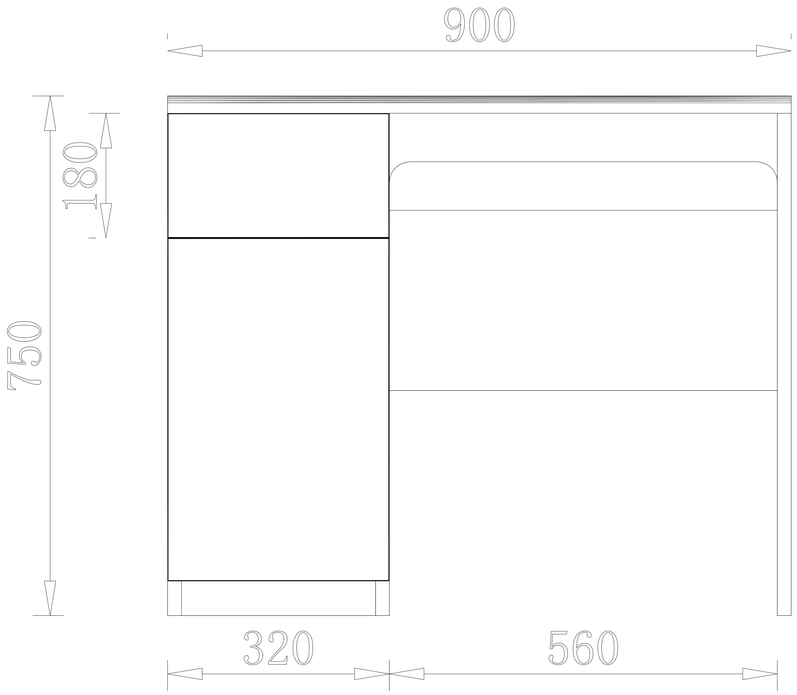

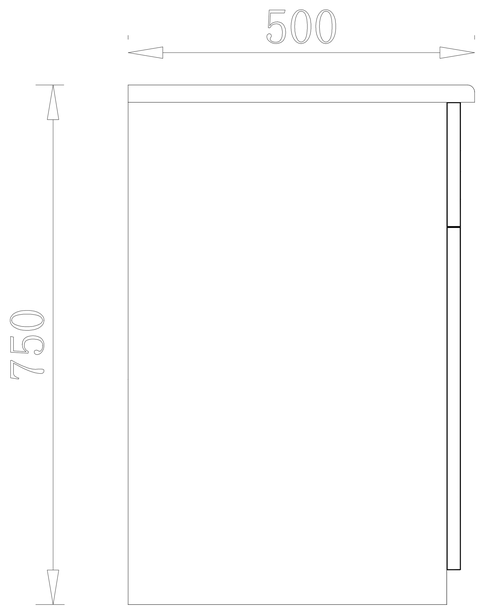

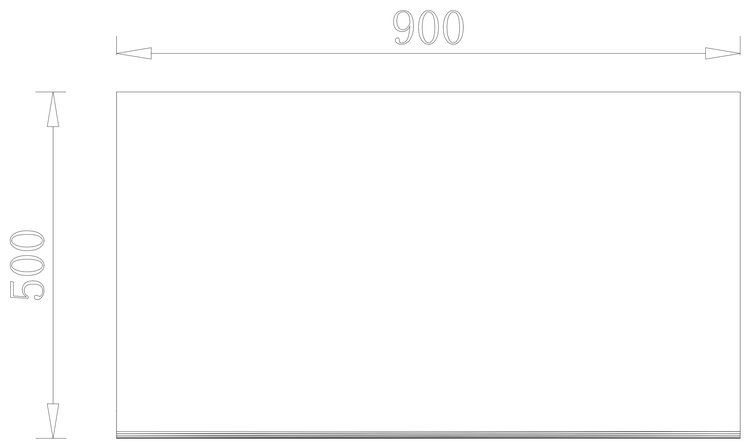

护士桌

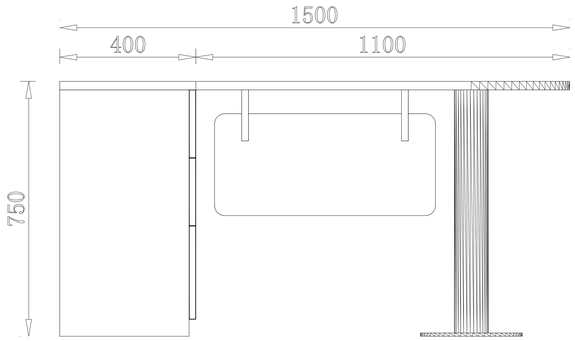
1500
400
1100
750

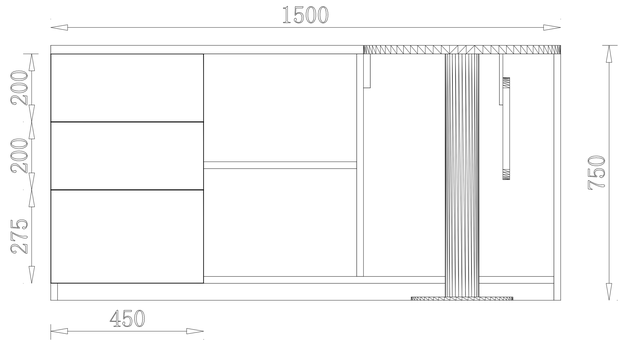
1500
200
200
275
750
450

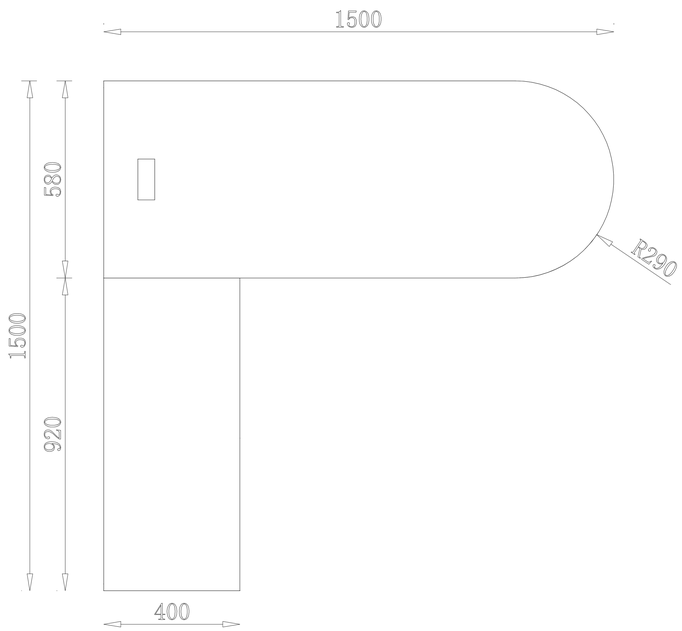
1500
580
1500
920
R290
400

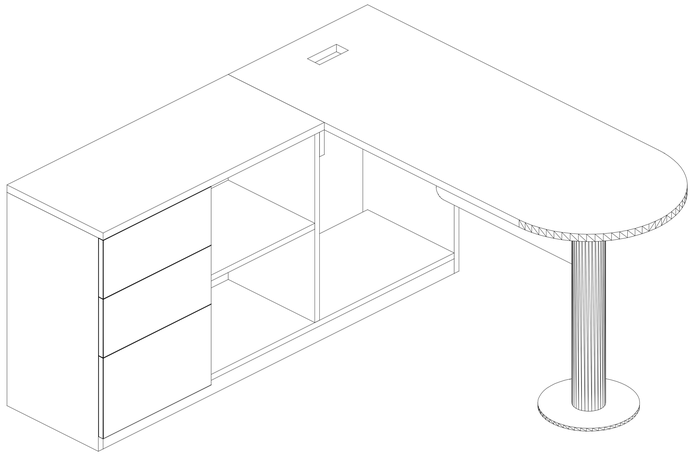

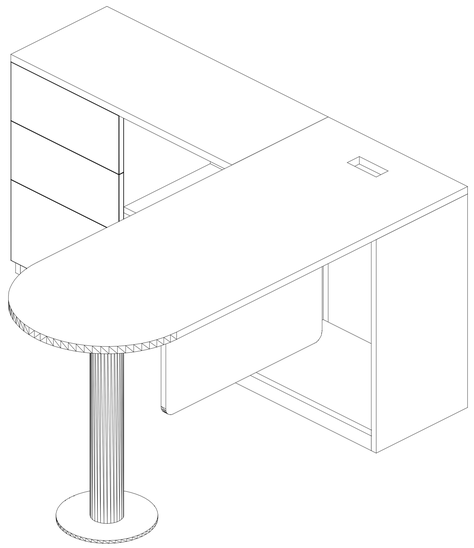

医生办公桌

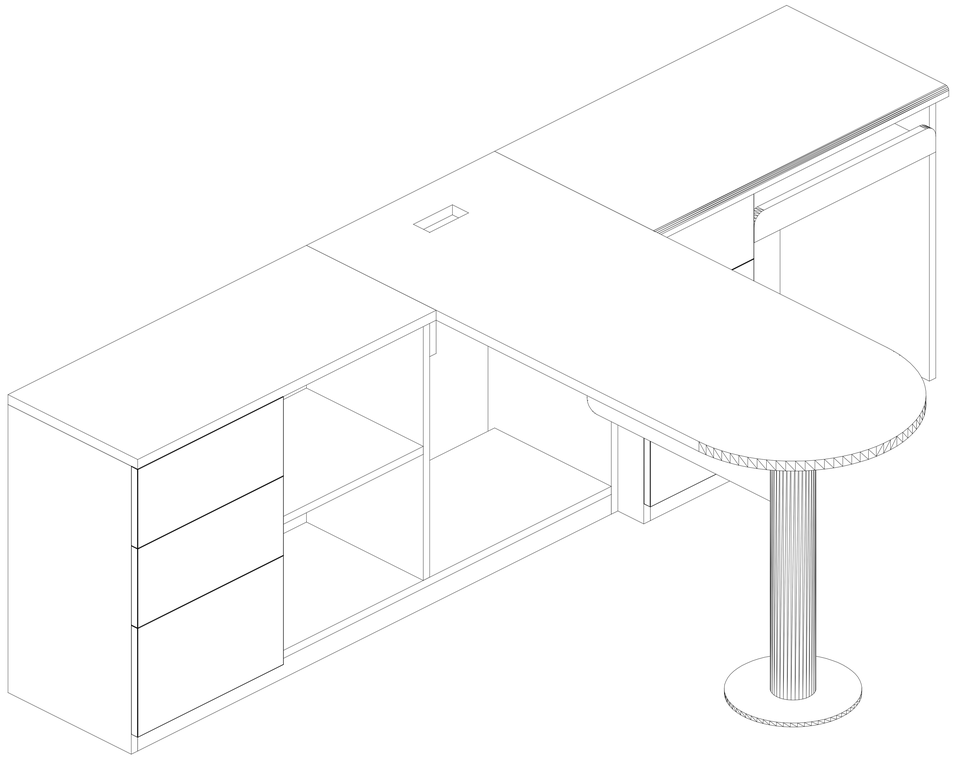

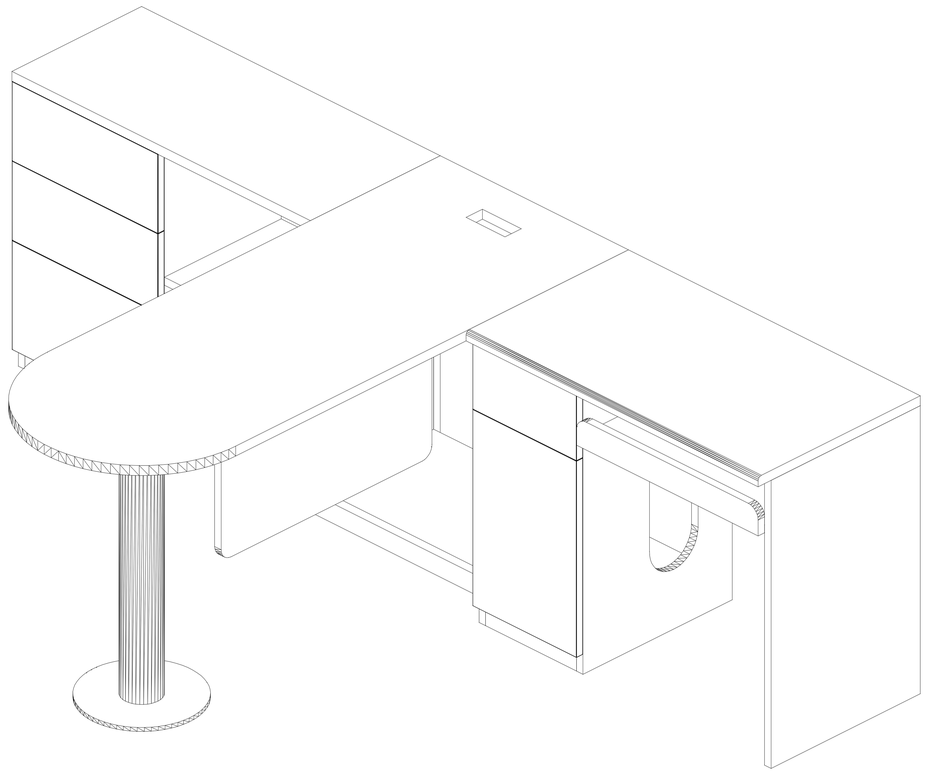

医生办公桌及护士桌

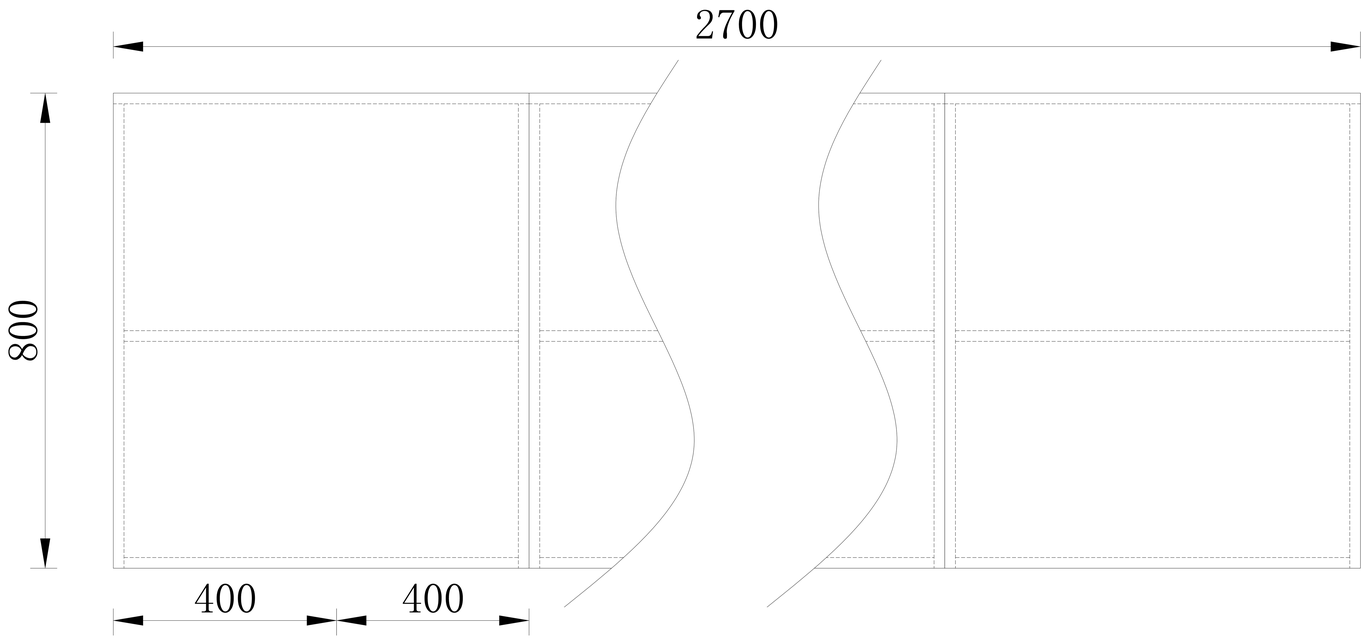

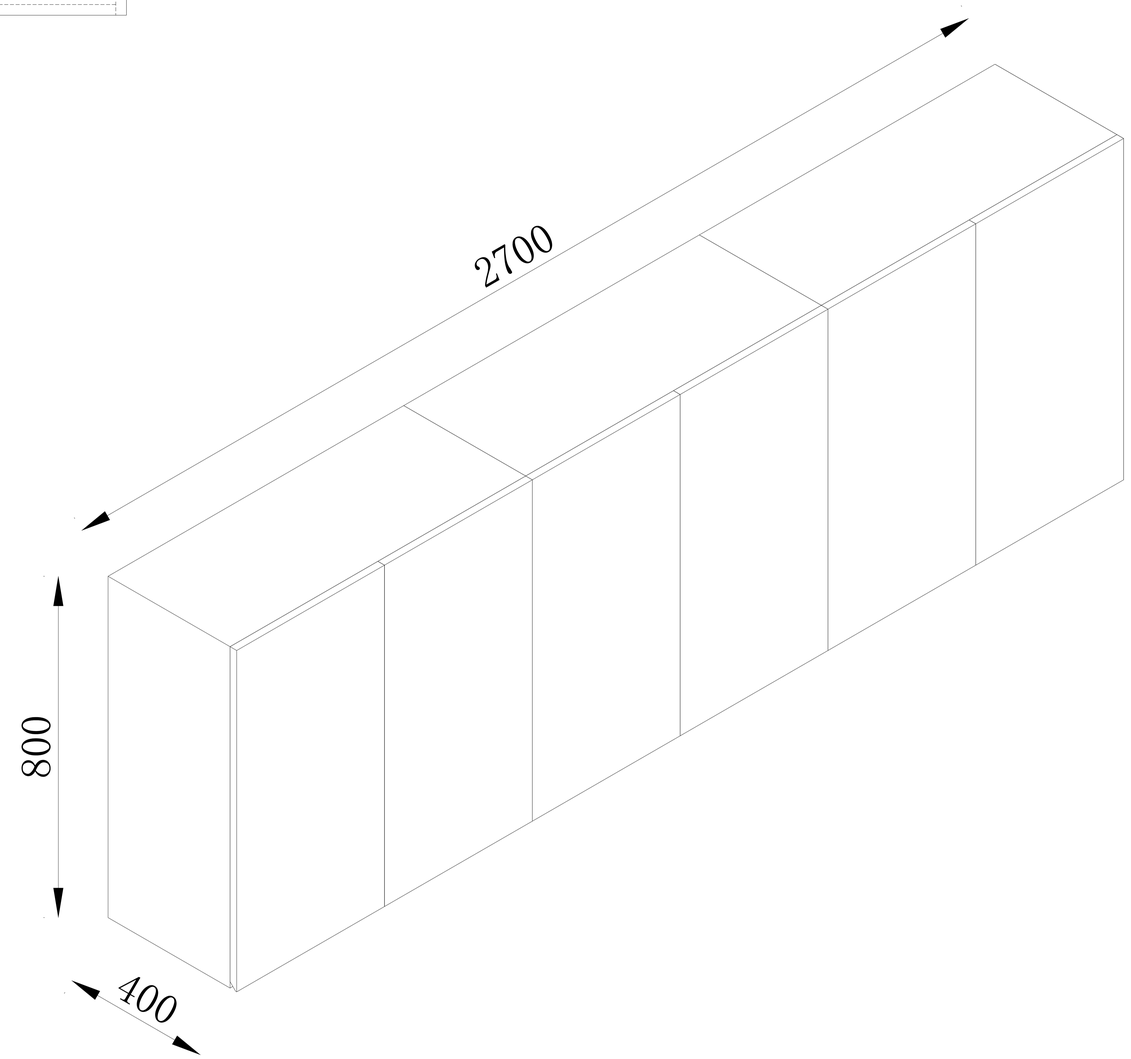

吊　柜

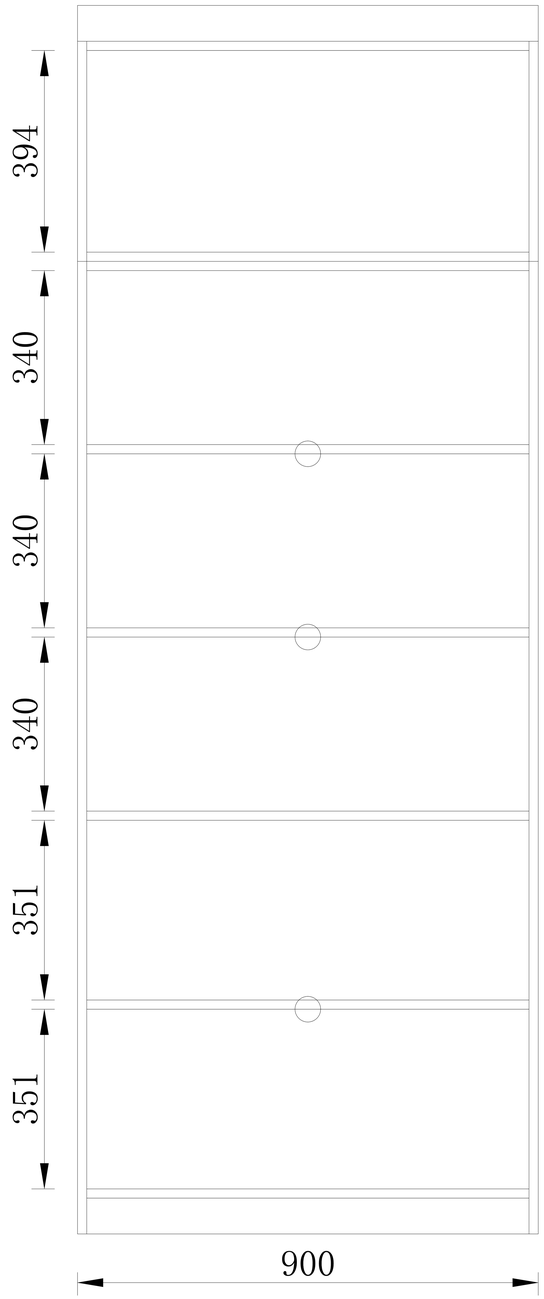

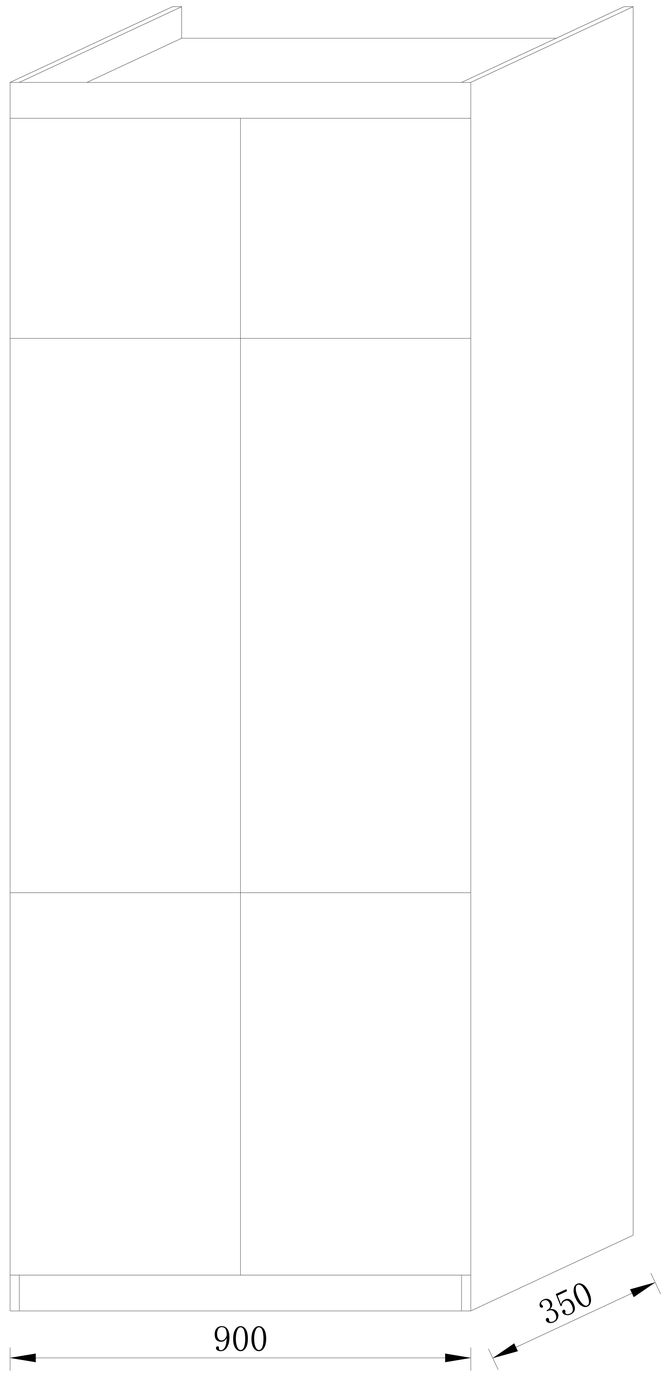

储物柜